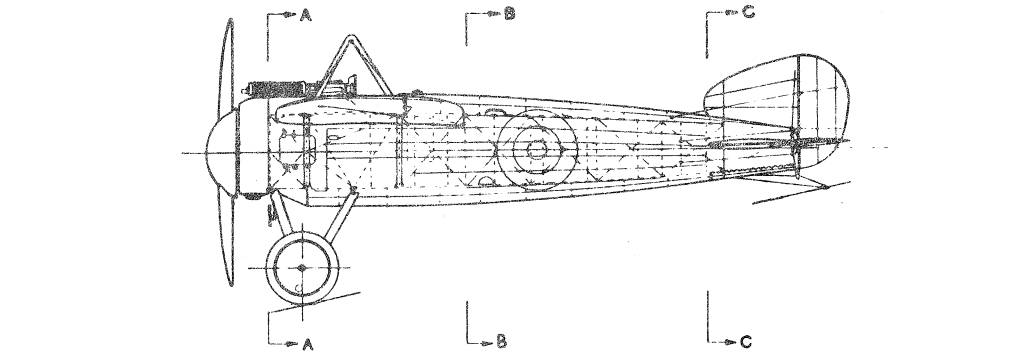

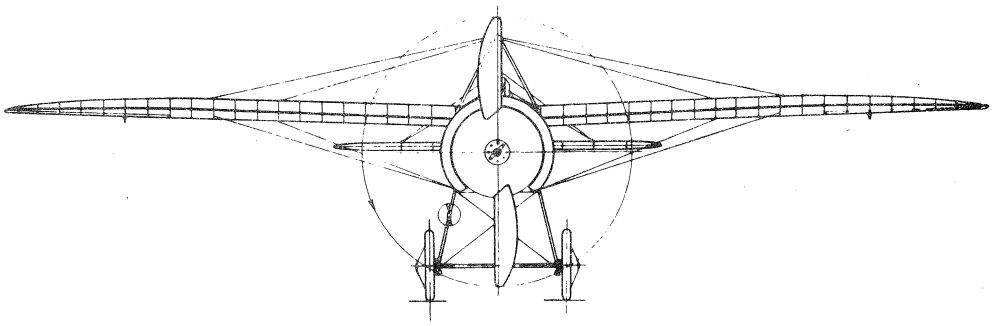

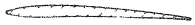

D D

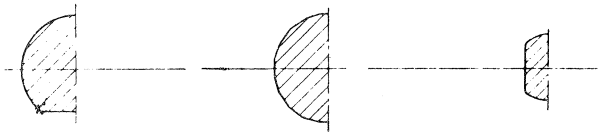

A A B B C C

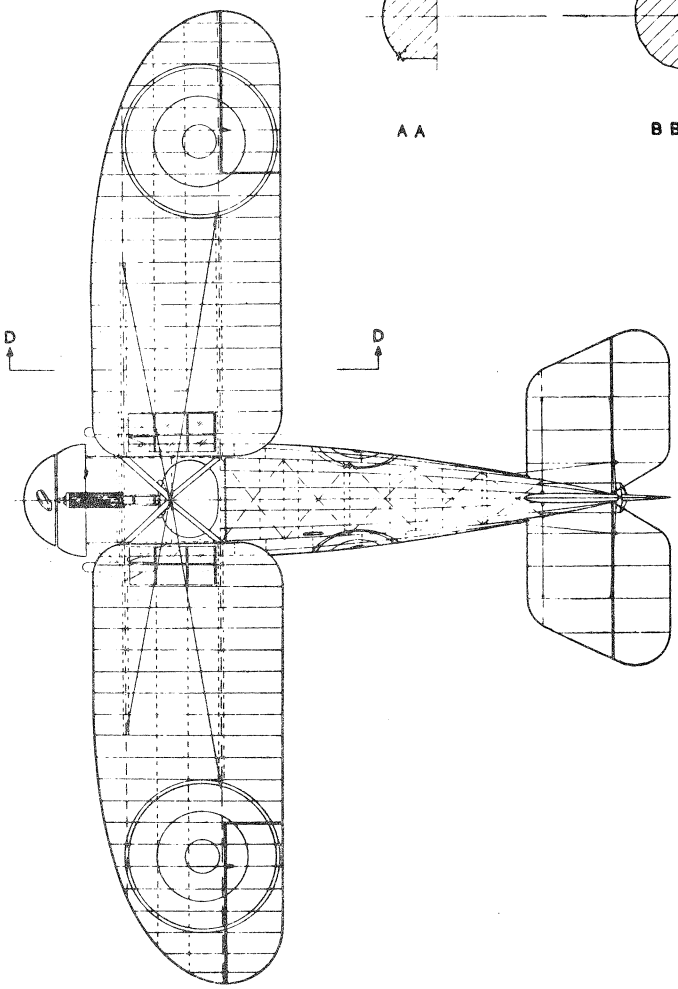

1918

BRISTOL M.1C MONOPLANE TYPE 20

F.T.