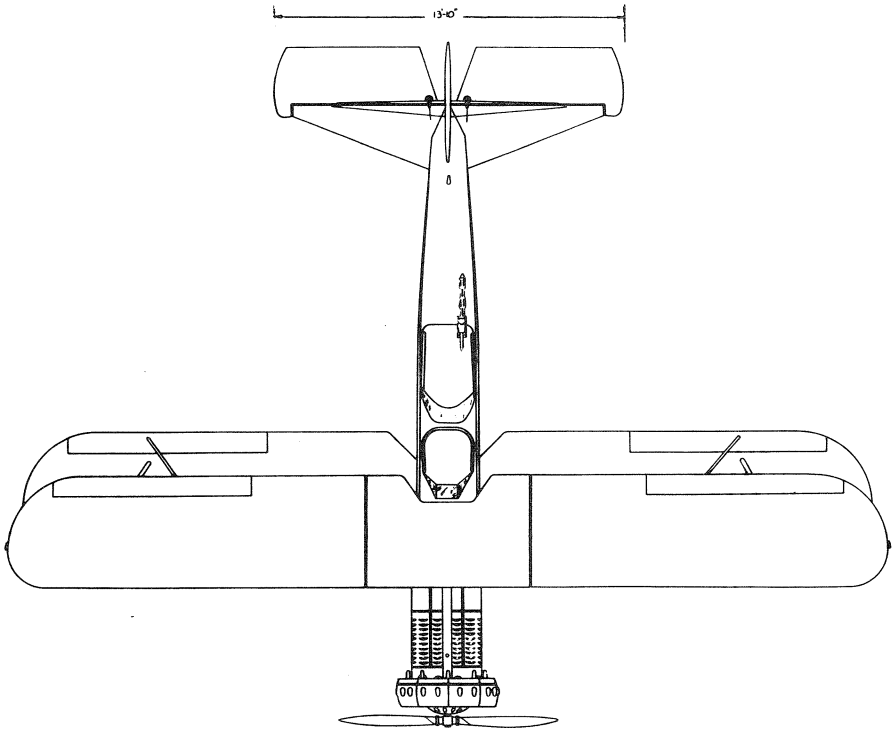

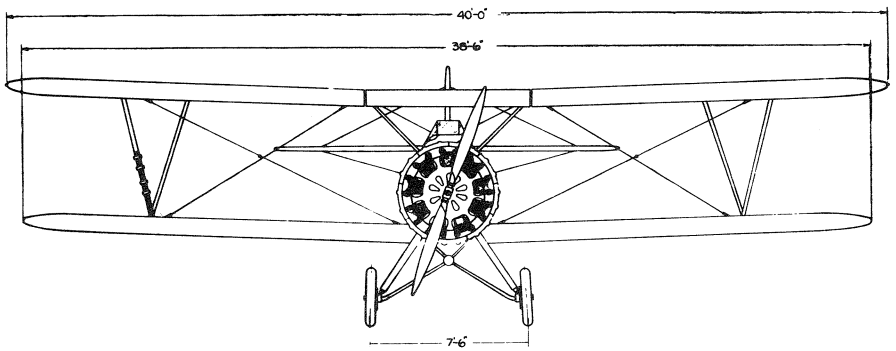

DOUGLAS OBSERVATION AIRPLANE
0-38

AREAS	
UPPER WING INCLUDING AILERONS	188 SQ.FT.
LOWER WING INCLUDING AILERONS	167 SQ.FT.
TOTAL WING AREA	355 SQ.FT.
STABILIZER	59 SQ.FT.
ELEVATORS	57 SQ.FT.
TOTAL HORIZONTAL TAIL SURFACE	50 SQ.FT.
FIN	17.8 SQ.FT.
RUDDER	15.94 SQ.FT.
TOTAL VERTICAL TAIL SURFACE	33.67 SQ.FT.
AIRFOIL SECTION	GOETTINGEN 398
DIHEDRAL	2 DEGREES
STAGGER	26 DEGREES POSITIVE
INCIDENCE	2 DEGREES
POWER PLANT	
ARMY—P&W 1690-B, P&W HORNET 1690-A-1	525 H.P. AT 1900 RPM.
PROPELLER-METAL, TWO BLADE, HUB NO. 30-707	
WEIGHTS	
WEIGHT EMPTY	3070 LBS
USEFUL LOAD	1386 LBS
GROSS WEIGHT	4456 LBS
FUEL CAPACITY MAIN TANK	110 GAL.
AUXILIARY TANK	38.5 GAL.
OIL CAPACITY	14 GAL.
WING LOADING	12.5 LBS/SQ.FT.
POWER LOADING	8.49 LBS/H.P.
PERFORMANCE	
HIGH SPEED SEA LEVEL	180 M.P.H.
LANDING SPEED	86 M.P.H.
RATE OF CLIMB	1800 FT/MIN.
CRUISING SPEED	158 M.P.H.
SERVICE CEILING	19,000 FT.
ABSOLUTE CEILING	20,300 FT.
CONSTRUCTION	
WINGS	SPRUCE COTTON FABRIC 88.2%
FUSELAGE	WELDED CHROME-MOLYB.-STEEL TUBING
AILERONS & TAIL UNITS	ALUMINUM ALLOY
LANDING GEAR	OLEO GEAR

INSTALLATIONS

307007-1	INSTALLATION - WINGS
407008	INSTALLATION - EMPENNAGE
541973	FUSELAGE ASSEMBLY - COVERED
507003	INSTALLATION - TAIL WHEEL
587004-1	INSTALLATION - LANDING GEAR WHEEL TYPE
508610	INSTALLATION - ENGINE
508874	INSTALLATION - ENGINE CONTROLS
549359	INSTALLATION - FUEL SYSTEM
549390	INSTALLATION - OIL SYSTEM
549357	INSTALLATION - FURNISHINGS
418141	INSTALLATION - FIRE EXTINGUISHER
549164	INSTALLATION - BOMBING APPARATUS
507700	INSTALLATION - FIXED MACHINE GUN
508500	INSTALLATION - FLEXIBLE MACHINE GUN
507014	INSTALLATION - PYROTECHNICS
549420	INSTALLATION - SURFACE CONTROLS
549310	INSTALLATION - ELECTRICAL EQUIP.
549161	INSTALLATION - AERONAUTICAL INSTRUM.
508660	INSTALLATION - PHOTOGRAPHIC EQUIP.

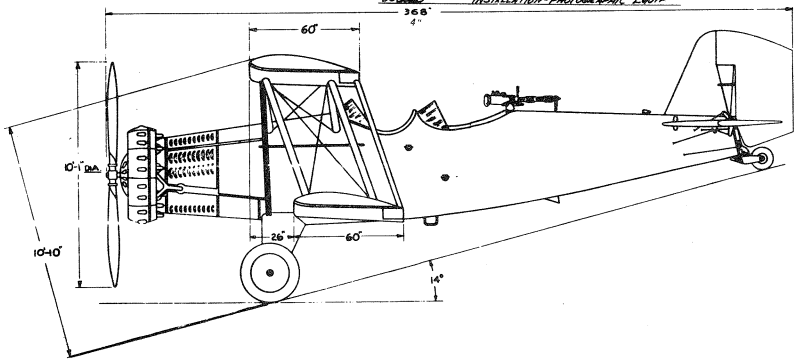

SCALE ONE TWENTIETH SIZE

DOUGLAS 0-38