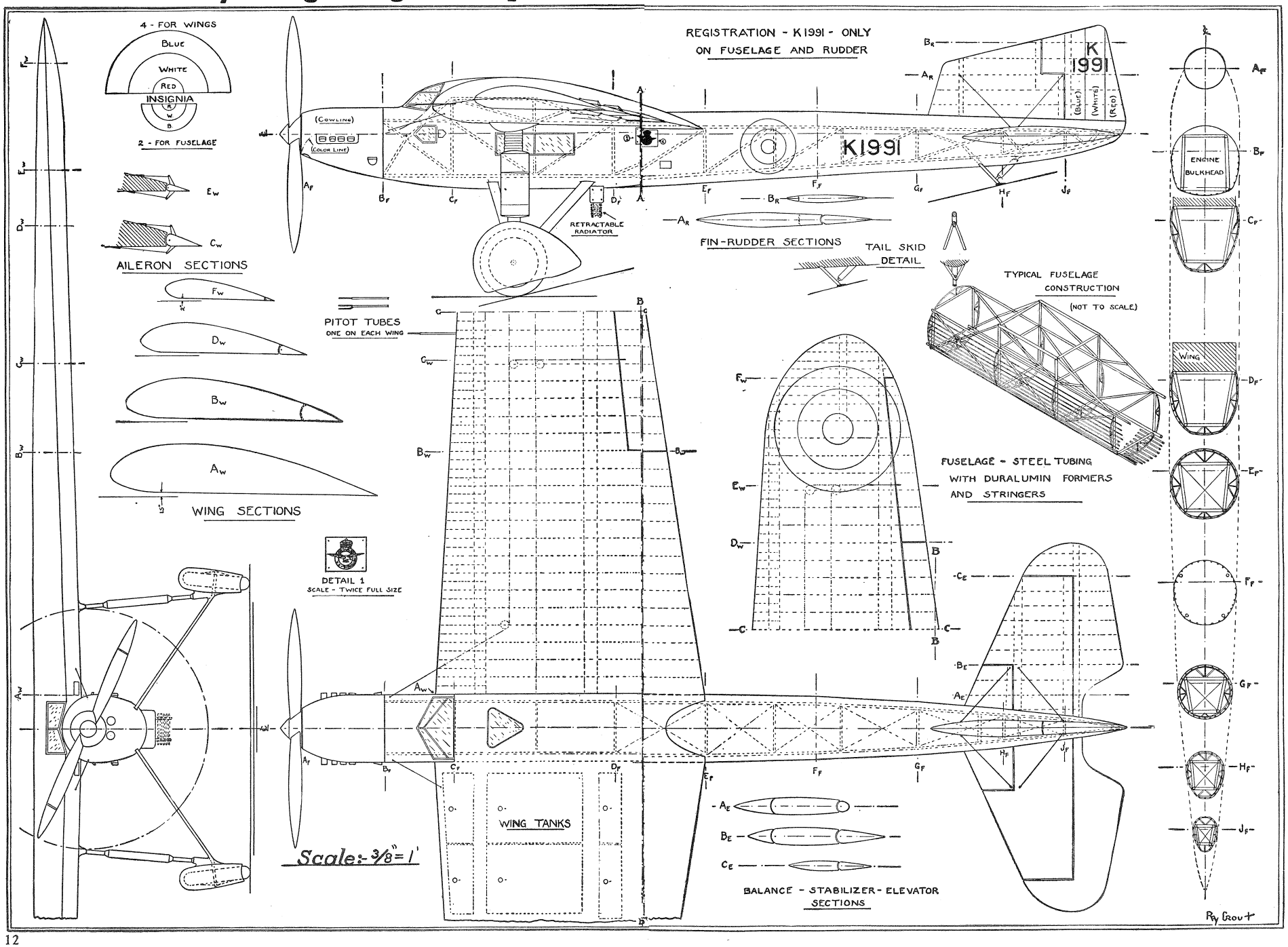The Fairey Long Range Monoplane