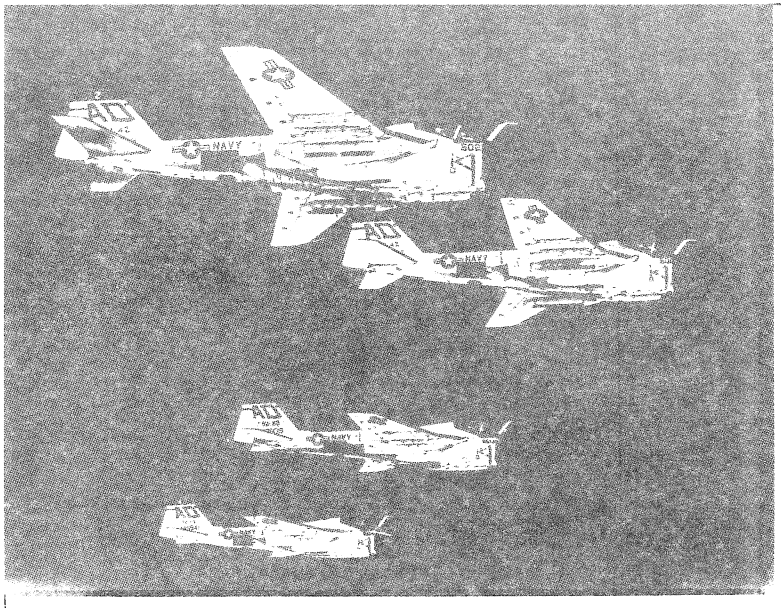

The A-6A "Intruder" is a sub-sonic, high-performance, attack bomber, powered by two Pratt & Whitney J52-P-6 jet engines, and designed to operate from carriers and short fields while carrying up to thirty 500-pound bombs for a total weight of 15,000 pounds, or any equivalent combination of nuclear or conventional weapons. The airplane, which carries a crew of two employs DIANE – Digital Integrated Attack Navigation System – which frees the pilot from consideration of details which can be performed automatically. It is also equipped with the Navy's new integrated cockpit display (Pathway-in-the-Sky) which provides a visual display of the terrain below and airspace in front of the airplane.

COLOR SCHEME

NON SPECULAR (DULL) LIGHT GULL GRAY	ALL AREAS AND SURFACES VISIBLE FROM ABOVE (FUSELAGE, WING, FIN) EXCEPT AS NOTED. SEE DRAWING.
GLOSS WHITE	ALL AREAS AND SURFACES VISIBLE FROM BELOW, RUDDER AND UPPER SURFACES OF STABILIZER FLAPS AND FLAPERONS. SEE DRAWING. STARS AND WHITE BARS OF INSIGNIA.
BLACK	ANTI GLARE AREA FORWARD OF COCKPIT, NOSE, TIRES, ALL LETTERING ON GULL GRAY AREAS EXCEPT AS NOTED. ARRESTING HOOK STRIPES (WITH WHITE)
RED	JET INTAKE CHEVRON, JET OUTLET DANGER ARROW, SEAT WARNING TRIANGLE BACKGROUND, FUEL DUMP DUCT OPENINGS, STATIC PORT CIRCLE, BARS IN INSIGNIA.
ALUMINUM	WING AND TAIL LEADING EDGES, JET OUTLET AREAS AND SPEED BRAKES DULL METAL
BLUE	INSIGNIA BORDERS, BACKGROUND DISC

NOTE: GRAY AND WHITE COLORS TO BE BLENDED ALONG LINE AS INDICATED

DIMENSIONS

SPAN	53'
LOA	54'7"
HOA	15' 2"

0 1 2 3 4 5 10 20
SCALE IN FEET

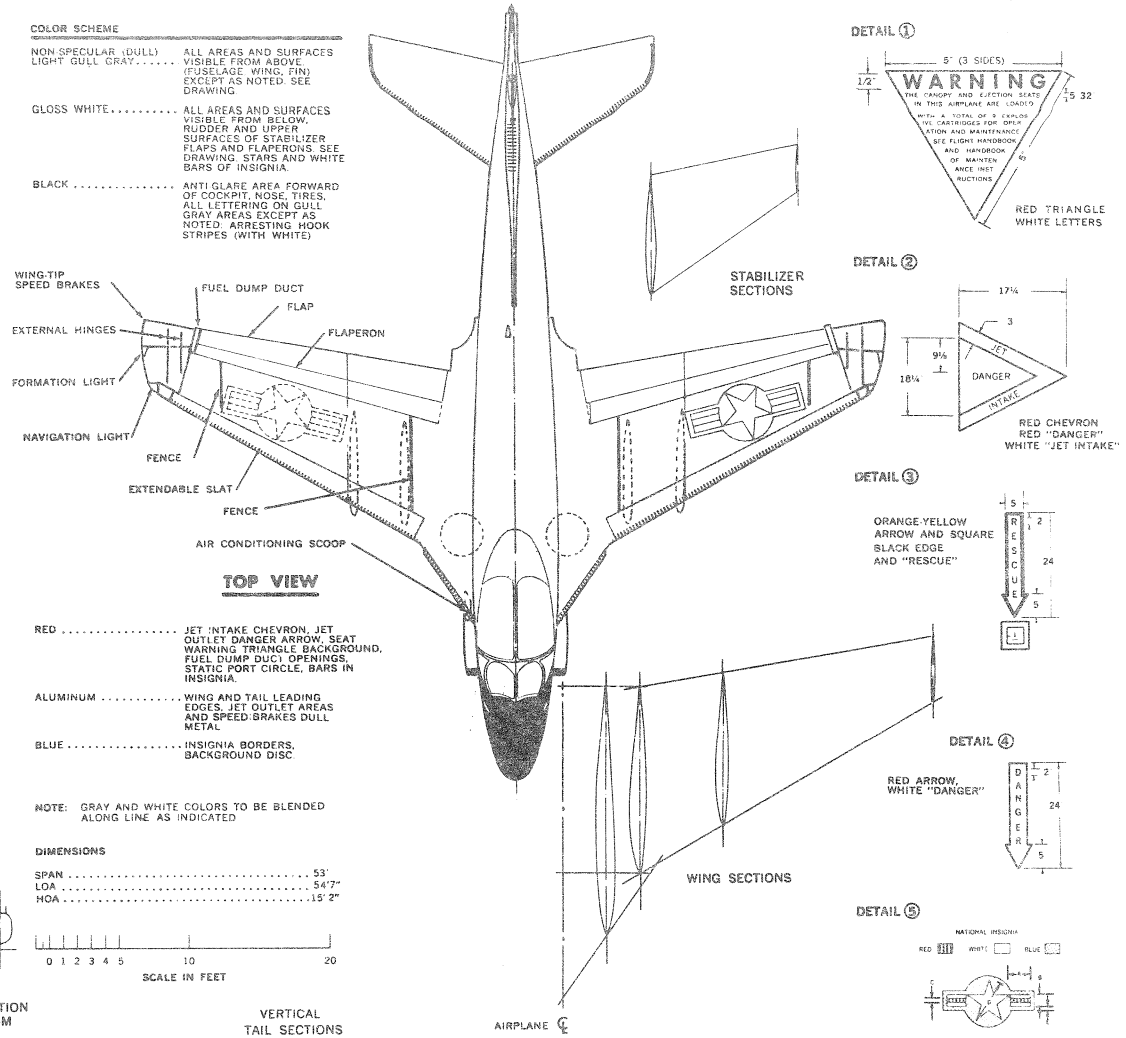

TOP VIEW

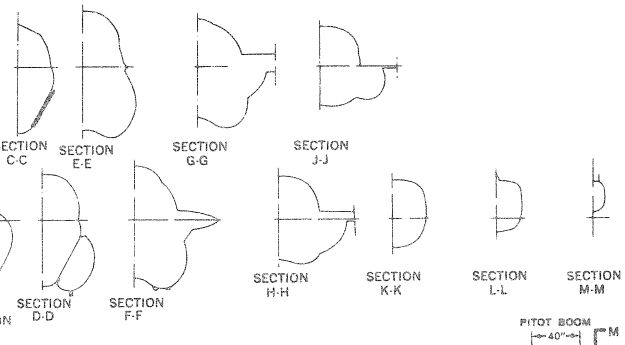

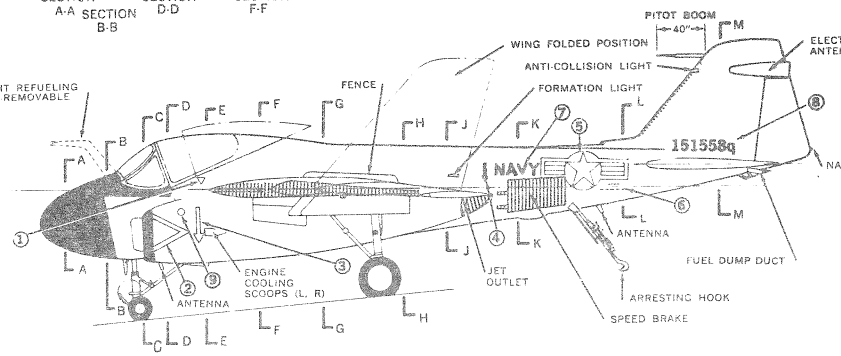

SIDE VIEW

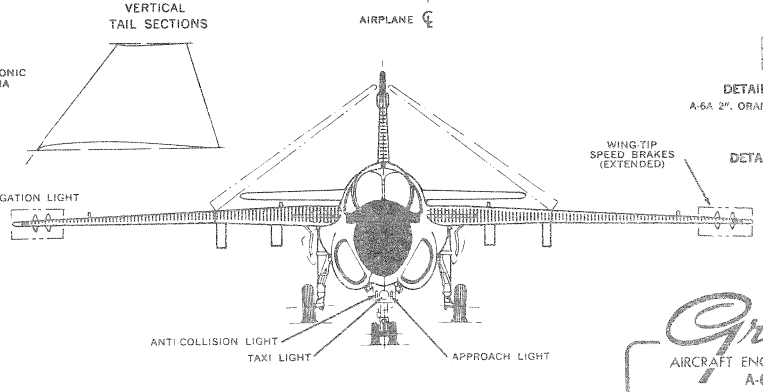

FRONT VIEW

Grumman
AIRCRAFT ENGINEERING CORPORATION
A-6A (A2F-1)
"INTRUDER"
U. S. Navy Attack Aircraft
February 1964