A-7E Corsair II BY

VOUGHT AERONAUTICS
LTV AEROSPACE CORPORATION
DALLAS TEXAS

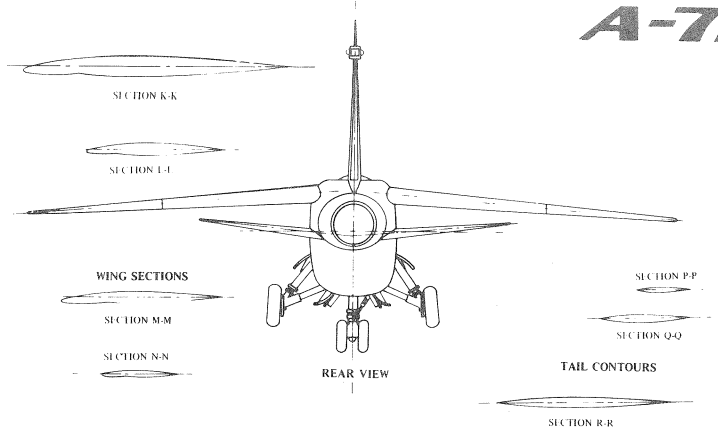

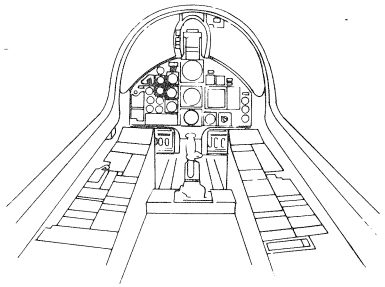

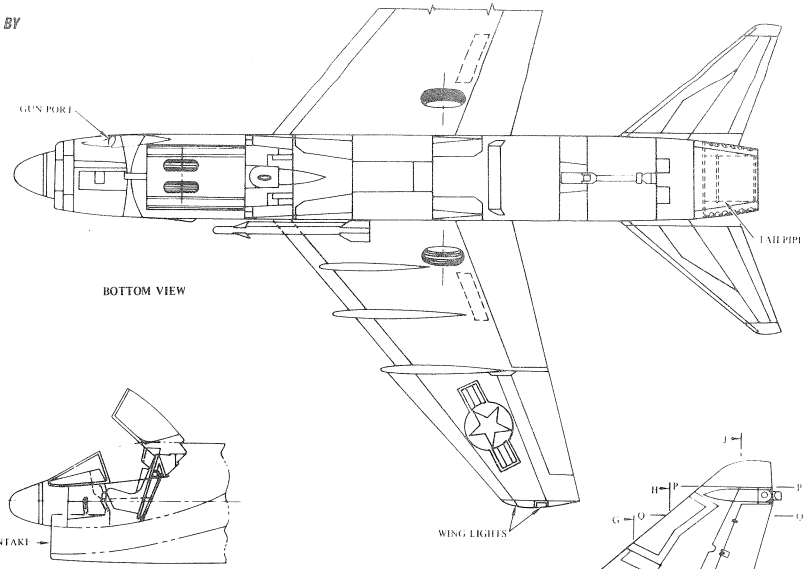

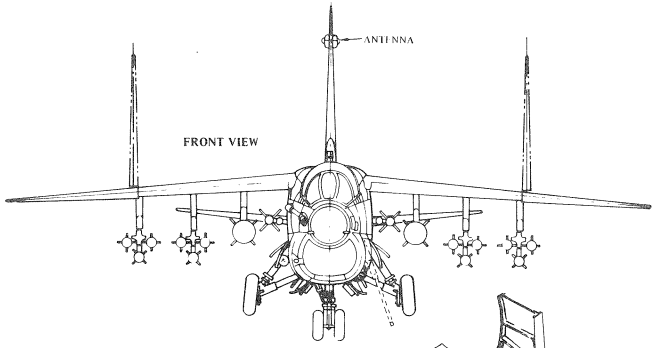

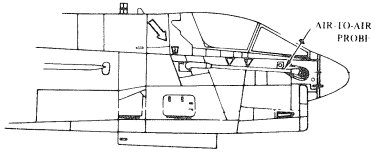

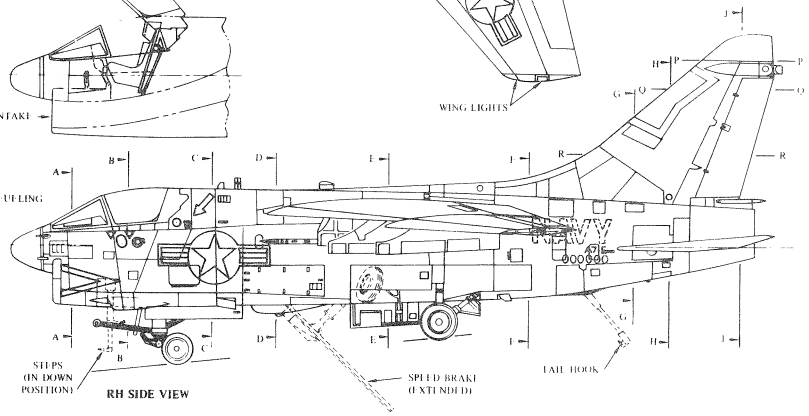

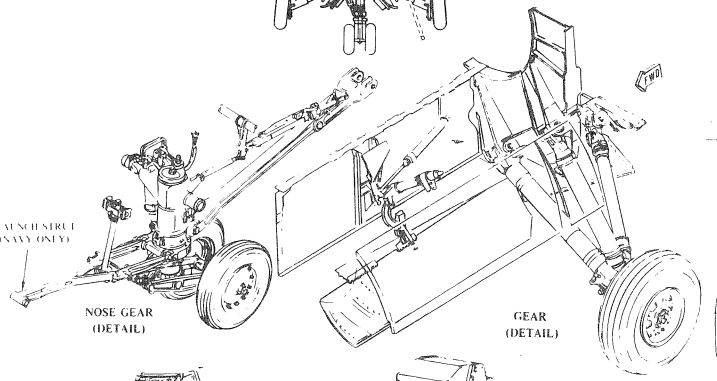

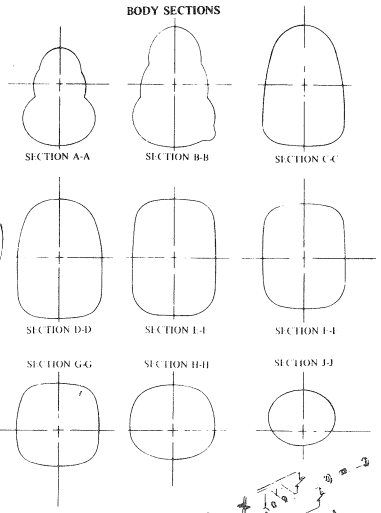

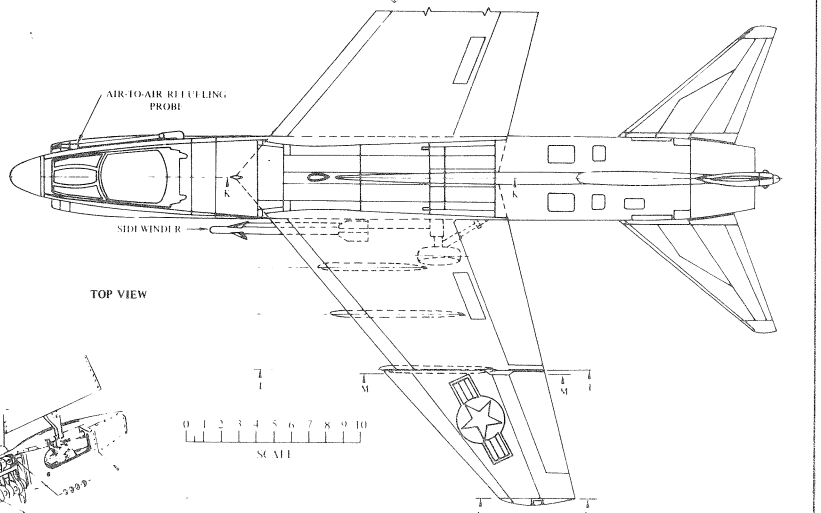

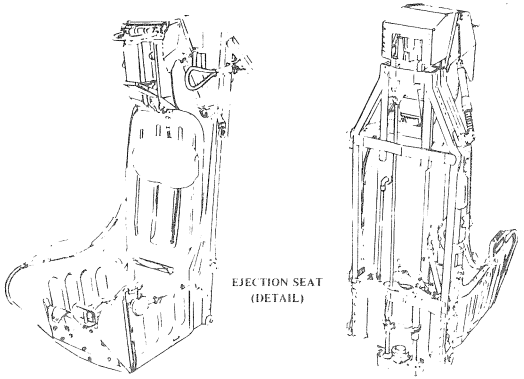

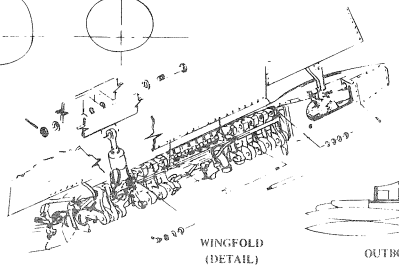

Photos by Art Schoeni
Drawings by Ed Richardson