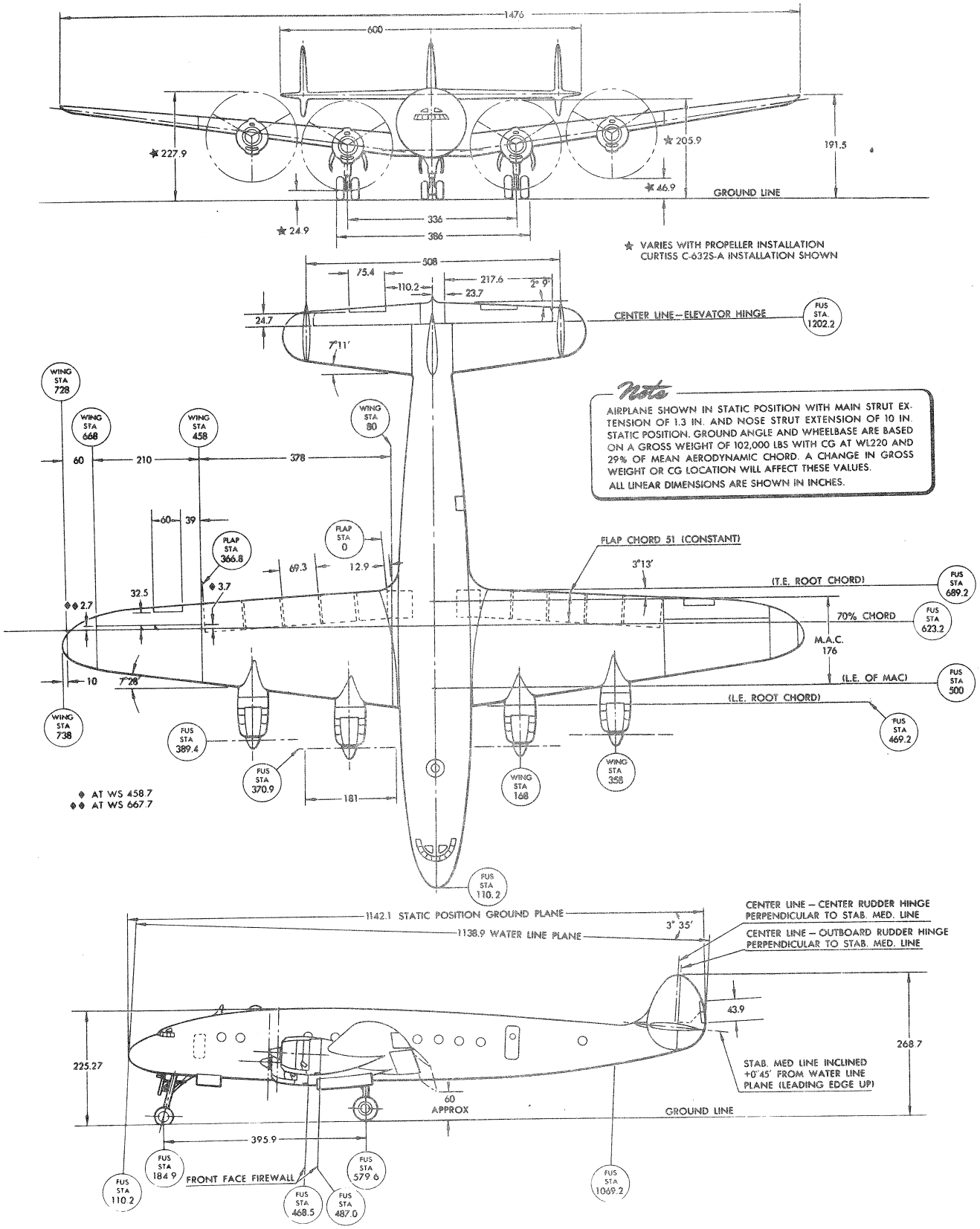

LOCHEED C-121A & B

Figure 1-2 — General Dimensions