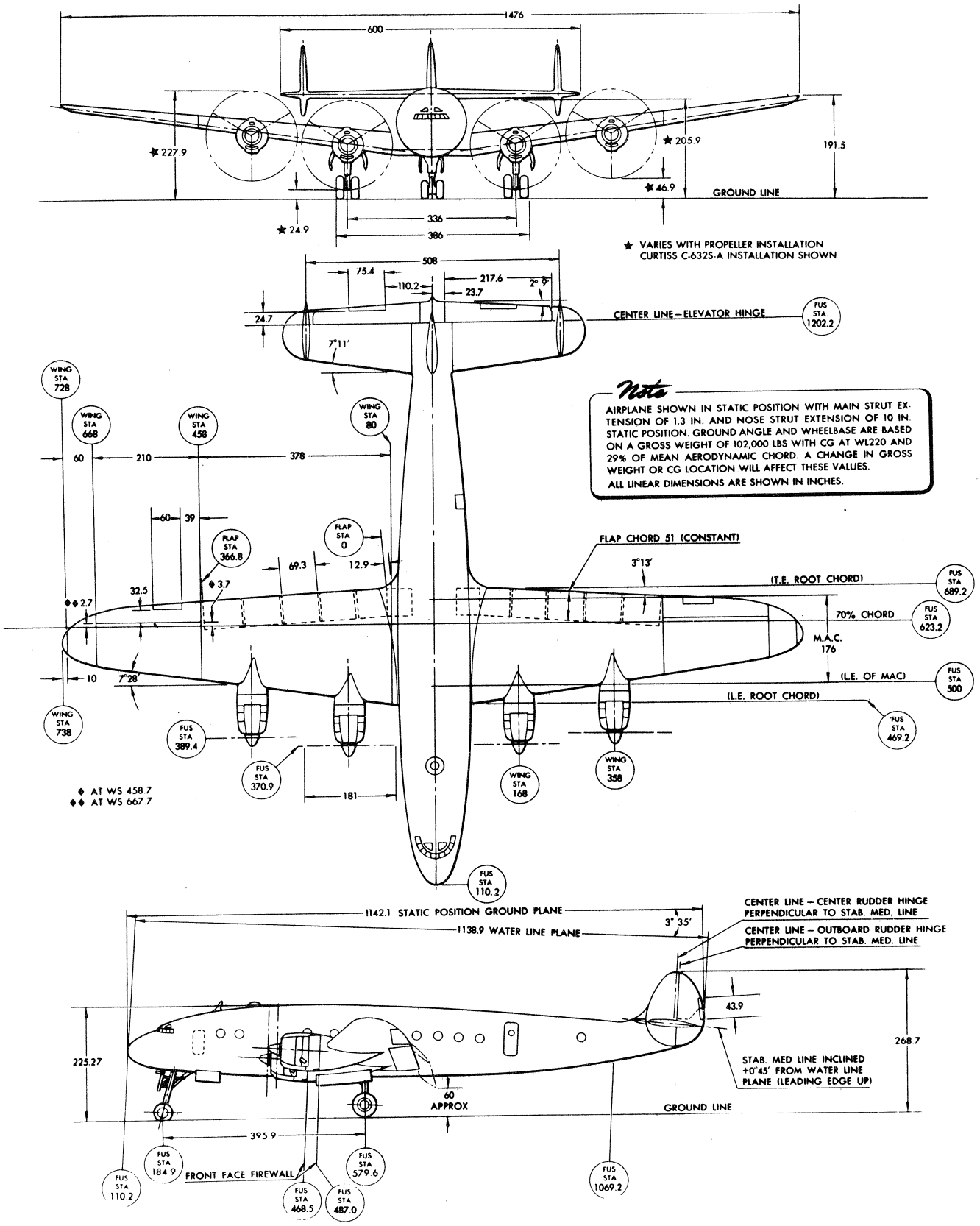

Lockheed C-69

Figure 1-2 — General Dimensions