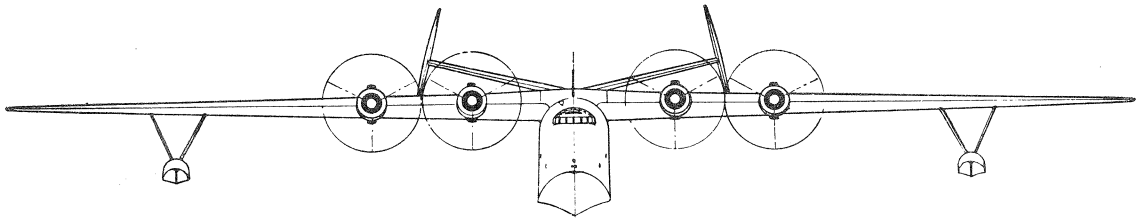

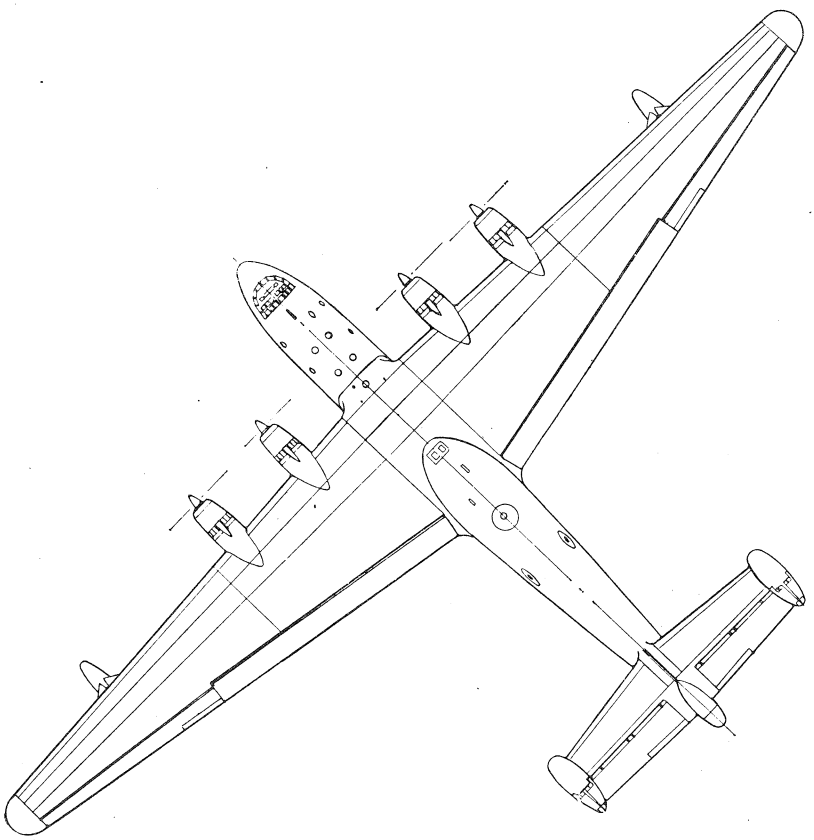

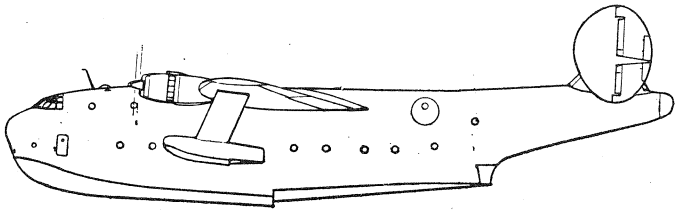

Martin XPB2M-1