GENERAL SPECIFICATIONS

WEIGHT EMPTY	370 lbs. (approx.)
USEFUL LOAD	190-230 lbs.
GROSS WEIGHT	560-600 lbs.
TOP SPEED	42 m.p.h. (est.)
WING AREA	186 sq. ft.
WING LOADING	3.2 lbs./sq. ft.
POWER LOADING	24 lbs./H.P.
ASPECT RATIO	5.7 to 1

ENGINE - 25 H.P. (at 1,200 r.p.m.) CURTISS 4 cyl., W.C.

TYPICAL CROSS SECTIONS

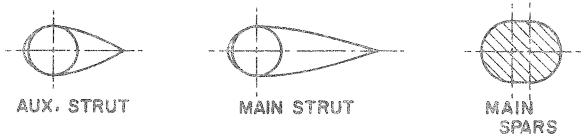

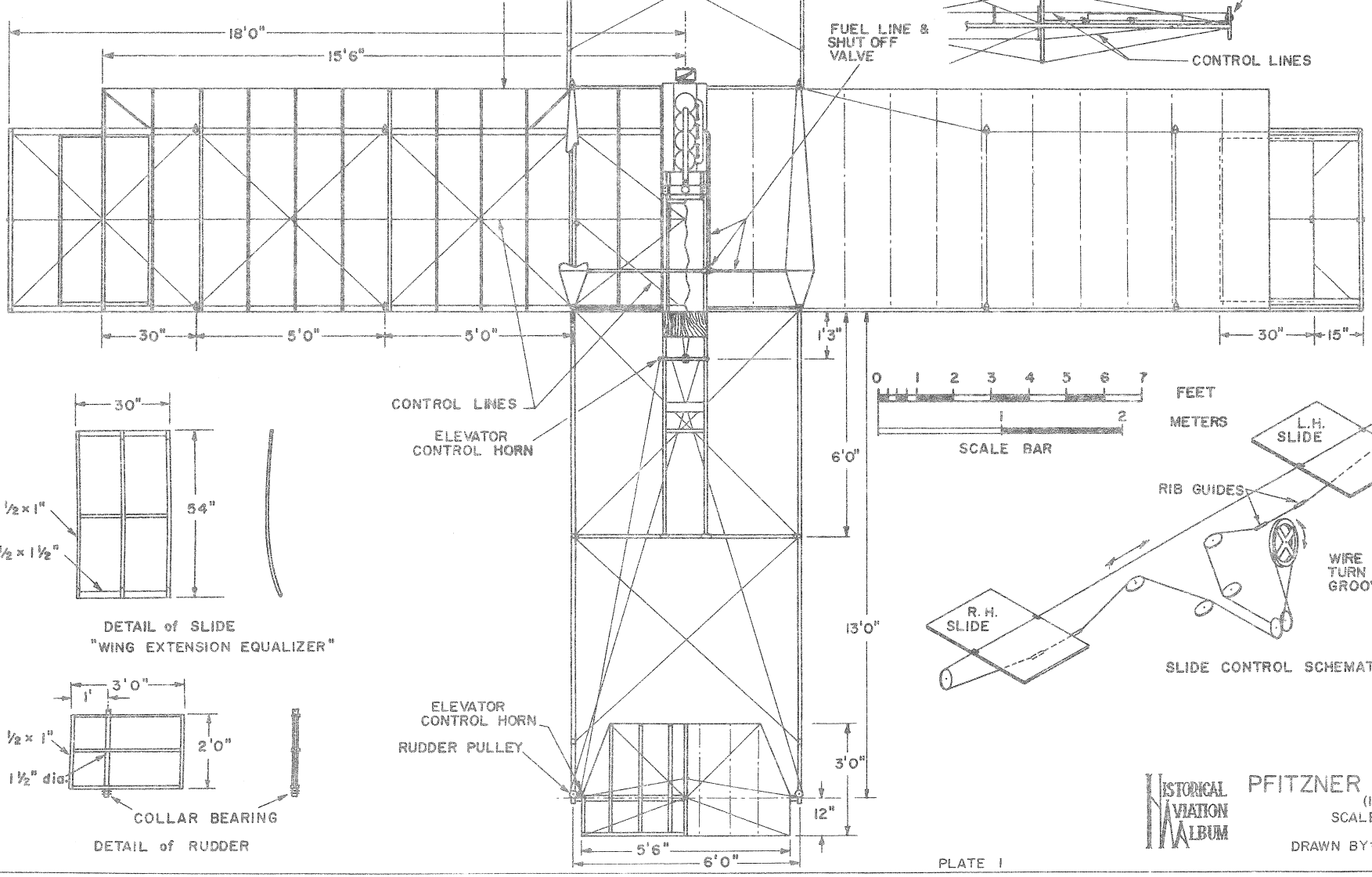

DETAIL of SLIDE "WING EXTENSION EQUALIZER"

DETAIL of RUDDER

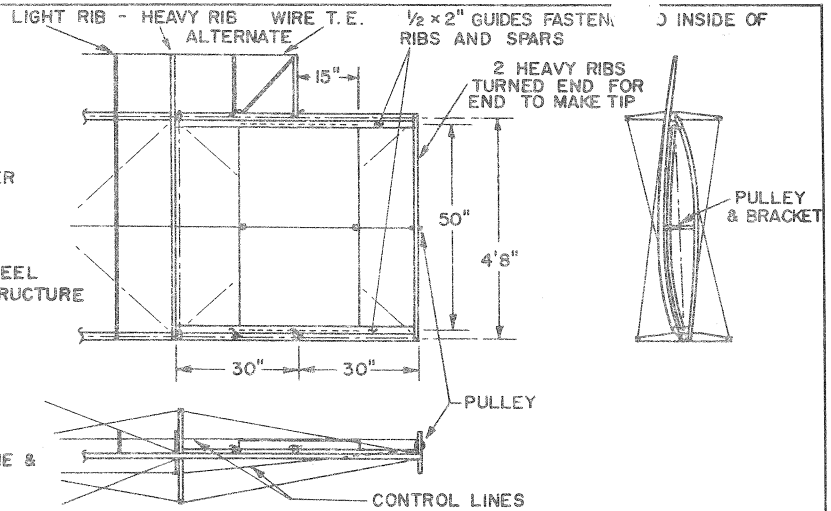

NOTE: WINGS DRAWN IN TRUE PLANFORM NOT AS 5° DIHEDRAL PROJECTION

SCALE BAR

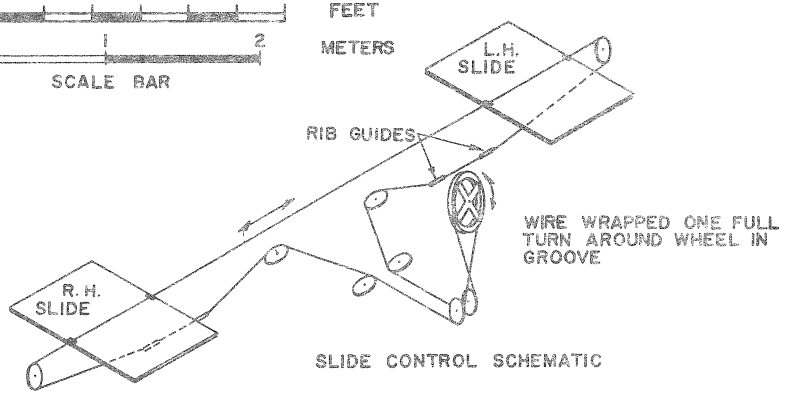

SLIDE CONTROL SCHEMATIC

HISTORICAL AVIATION ALBUM

PFITZNER MONOPLANE

(1910)

SCALE: 1:48

DRAWN BY: H. KELLEY

© PAUL R. MATT 1965

PLATE I

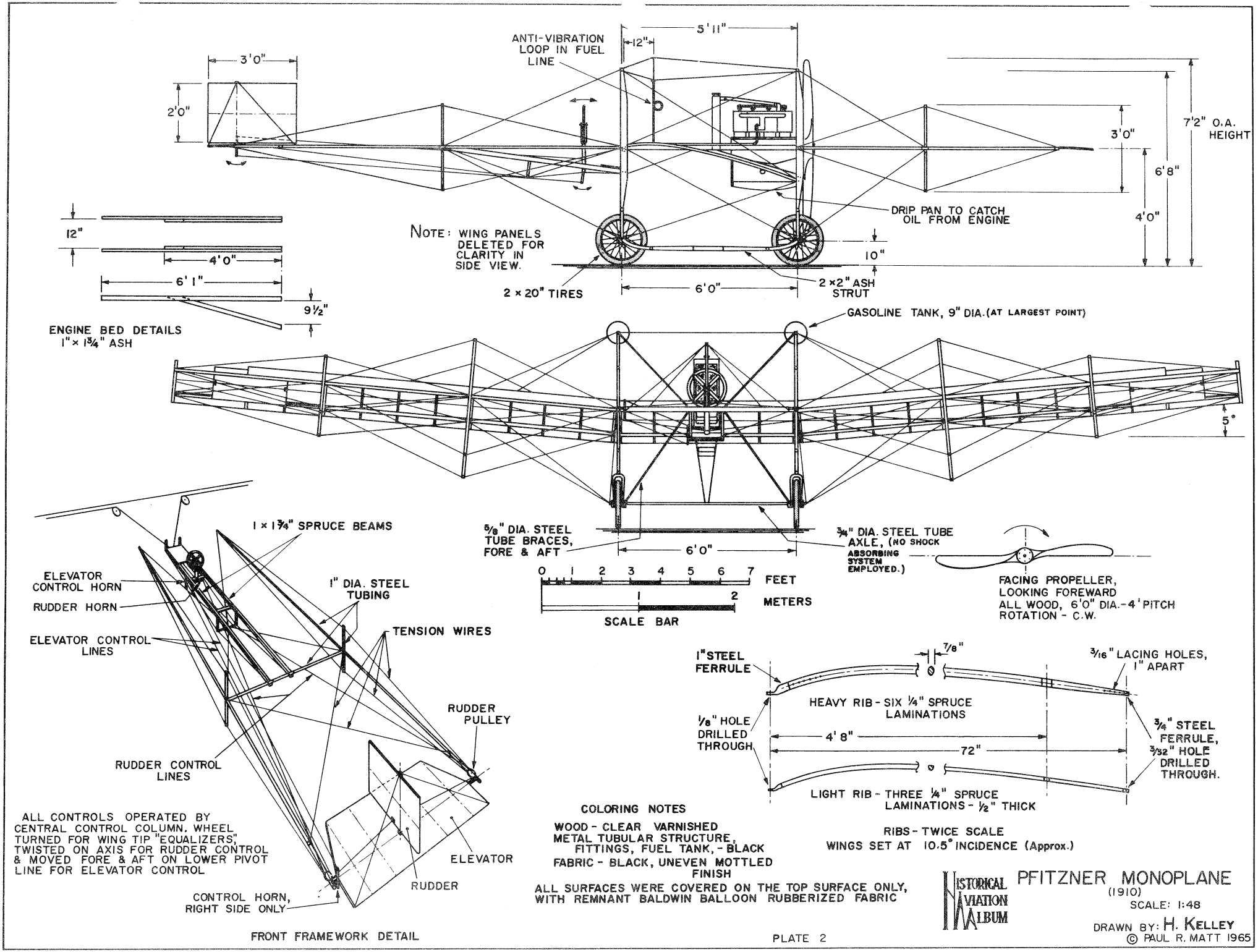
ANTI-VIBRATION LOOP IN FUEL LINE
5'11"
12"
3'0"
2'0"
7'2" O.A. HEIGHT
3'0"
6'8"
4'0"
DRIP PAN TO CATCH OIL FROM ENGINE
NOTE: WING PANELS DELETED FOR CLARITY IN SIDE VIEW.
10"
2 × 20" TIRES
6'0"
2 × 2" ASH STRUT
12"
4'0"
6'1"
9½"
ENGINE BED DETAILS
1" × 1¾" ASH
GASOLINE TANK, 9" DIA. (AT LARGEST POINT)
5°
1 × 1¾" SPRUCE BEAMS
⅝" DIA. STEEL TUBE BRACES, FORE & AFT
6'0"
¾" DIA. STEEL TUBE AXLE, (NO SHOCK ABSORBING SYSTEM EMPLOYED.)
0 1 2 3 4 5 6 7 FEET
1 2 METERS
SCALE BAR
FACING PROPELLER, LOOKING FOREWARD
ALL WOOD, 6'0" DIA.-4' PITCH
ROTATION - C.W.
ELEVATOR CONTROL HORN
RUDDER HORN
ELEVATOR CONTROL LINES
1" DIA. STEEL TUBING
TENSION WIRES
RUDDER PULLEY
RUDDER CONTROL LINES
ALL CONTROLS OPERATED BY CENTRAL CONTROL COLUMN. WHEEL TURNED FOR WING TIP "EQUALIZERS", TWISTED ON AXIS FOR RUDDER CONTROL & MOVED FORE & AFT ON LOWER PIVOT LINE FOR ELEVATOR CONTROL
ELEVATOR
RUDDER
CONTROL HORN, RIGHT SIDE ONLY
FRONT FRAMEWORK DETAIL
1" STEEL FERRULE
⅞"
3/16" LACING HOLES, 1" APART
HEAVY RIB - SIX ¼" SPRUCE LAMINATIONS
⅛" HOLE DRILLED THROUGH
4'8"
72"
¾" STEEL FERRULE, 3/32" HOLE DRILLED THROUGH.
LIGHT RIB - THREE ¼" SPRUCE LAMINATIONS - ½" THICK
RIBS - TWICE SCALE
WINGS SET AT 10.5° INCIDENCE (Approx.)
COLORING NOTES
WOOD - CLEAR VARNISHED
METAL TUBULAR STRUCTURE, FITTINGS, FUEL TANK, - BLACK
FABRIC - BLACK, UNEVEN MOTTLED FINISH
ALL SURFACES WERE COVERED ON THE TOP SURFACE ONLY, WITH REMNANT BALDWIN BALLOON RUBBERIZED FABRIC
HISTORICAL AVIATION ALBUM
PFITZNER MONOPLANE
(1910)
SCALE: 1:48
DRAWN BY: H. KELLEY
© PAUL R. MATT 1965
PLATE 2